Preliminary June 2013

INFICON

Spot™ CDS500D

OEM Capacitance Diaphragm Sensor

The SPOT CDS500D suspended ceramic capacitance diaphragm sensor is designed for integration into the limited space in your specific vacuum instruments and systems. The miniature sensor is highly corrosion resistant as the alumina ceramic cell, the suspension and a weldable stainless steel feedthrough are all alumina coated. The sensor electronics provide a digital SPI interface for easy integration and safe communication. The sensor features a fast data cycle time for instant response to pressure changes, outstanding long-term stability and excellent repeatability. The sensor is provided in two versions, either factory calibrated with flange or uncalibrated with or without flange.

Advantages

- **Miniature Alumina (Al_2O_3) ceramic coated capacitance diaphragm sensor is highly corrosion resistant**
- **Excellent repeatability and long-term stability**
- **Weldable feedthrough for custom integration and calibration, or welded custom flange for integration of factory calibrated sensor**
- **Sensor electronics with SPI interface for easy integration and safe communication**
- **Fast response time**
- **High overpressure capability**

Applications

- **For integration into custom vacuum instrumentation and systems**

Ordering Information

On request

INFICON Limited

FL-9496 Balzers, Principality of Liechtenstein
Tel: +423 388 3111 Fax: +423 388 3700
www.inficon.com reach.liechtenstein@inficon.com

Specifications

Measurement (general)

Nominal measuring range (F.S.)	Torr	10, 100, 1000
Zeroing pressure	% F.S.	≤0.005
Long-term zero point stability	%F.S. /Year	±0.5
Long-term span point stability	%F.S. /Year	±0.5
Response time	ms	<2
Noise RMS	% F.S.	≤0.023 (0.15 peak-peak)
Max. admissible pressure	kTorr g	3[1)]

Measurement (custom flange & calibration by INFICON)

Specified measuring range	% F.S.	0.1
Accuracy (at 25°C) (includes linearity, hysteresis and repeatability)	% F.S.	±0.5
Temperature coefficient of span	% F.S. /°C	±0.01
Temperature coefficient of zero	% F.S. /°C	±0.01
Burst pressure	kTorr g	>6

Measurement (flange & calibration by customer)

Resolution	% F.S.	0.01
Span point calibration error (at 25°C)	%F.S.	≤7
Repeatability (at 25°C)	%F.S.	≤0.06
Linearity (at 25°C)	%F.S.	≤5
Capability of temperature compensation for a temperature coefficient of span of	%F.S./°C	±0.01
Capability of temperature compensation for a temperature coefficient of zero of	%F.S./°C	±0.01

Environment

Compensated temperature range	°C	+15…+45
Max. temperature range (operating)	°C	0…+60
Max. temperature range (storage)	°C	0…+80
Relative humidity	%RH	≤80, non-condensing
Use		Indoors only, altitude up

INFICON Limited

FL-9496 Balzers, Principality of Liechtenstein
Tel: +423 388 3111 Fax: +423 388 3700
www.inficon.com reach.liechtenstein@inficon.com

Electrical Interface

Supply voltage range	VDC	5V±0.25V
Supply voltage ripple and noise	mV_{pp}	≤50
Power consumption	W	≤0.25
Electrical protection		Overvoltage to 6.0V
Connector	Type	JST 1mm pitch, 10 pin

Data Exchange

Digital SPI interface		SPI specification[2)]
Data cycle time	ms	≤1

Mechanical Interface

Electronics dimension	mm	20.5 x 25.5
Total height	mm	≤27.5
Feedthrough diameter	mm	14
Mounting orientation		Any
Leak-tightness feedthrough	mbar l / s	$\leq 10^{-9}$ [3)]

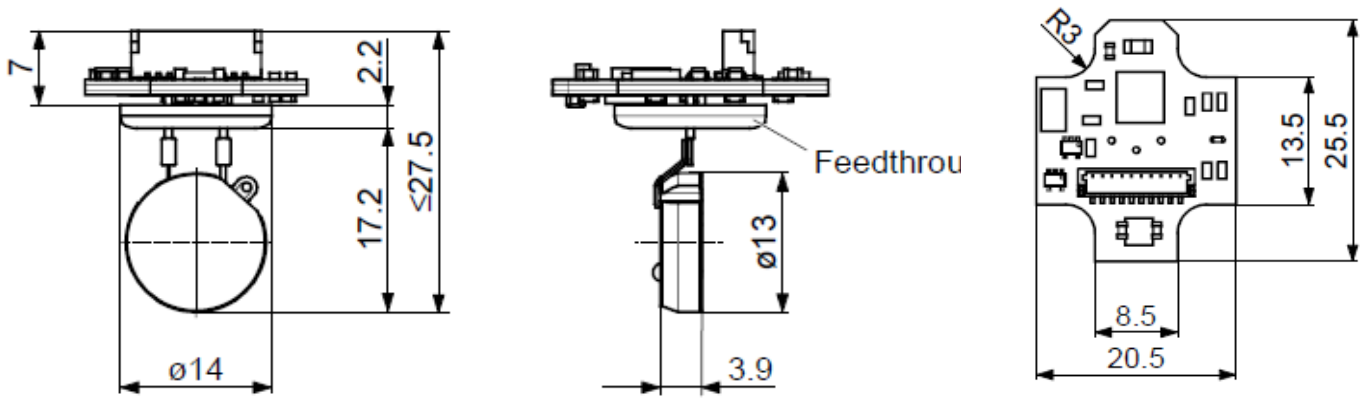

[2)] Not included in scope of delivery

Wetted Materials

Sensor interior	Al_2O_3 (coating)

INFICON Limited

FL-9496 Balzers, Principality of Liechtenstein
Tel: +423 388 3111 Fax: +423 388 3700
www.inficon.com reach.liechtenstein@inficon.com

Standards

Restriction of Hazardous Substances (RoHS)	2011/65/EU
Flame class rating	UL94 V0

[1] short term, max. 1h exposure to admissible pressure
[2] SPI-interface specification
[3] Δp 1bar He at room temperature

INFICON Limited

FL-9496 Balzers, Principality of Liechtenstein
Tel: +423 388 3111 Fax: +423 388 3700
www.inficon.com reach.liechtenstein@inficon.com